CODING
-133137

ISO 9001:2015
Reg. No. 000435-1-MY-1-QMS

nuhoom.com

Read the instructions carefully. Remove all the wrappings , staples and straps from the carton. Refer to the hardware and furniture part list for guidance. Make sure that you have all the parts before you start assembling. Place all the wooden furniture parts on a clean, flat and soft surface, such as a carpet or rubbermat to prevent scratches.

CAUTION
KEEP ALL THE PARTS OUT OF CHILDREN'S REACH.

ITEM	PHOTO	HARDWARE NAME	QTY
1		Minifix Bolt	25
2		Cam 12/15	9
3		Cam 9/15	16
4		Wood Dowel 6 x 30	44
5		Csk Screw 3.5 x 15	16
6		Euro Screw 6 x 9	16
7	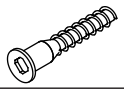	Unitar Screw 6.3 x 40	10
8		Csk Screw 4.7 x 38	16
9		Csk Screw 4 x 20	16
10	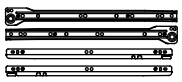	Drawer Slide (250mm)	4 Set
11	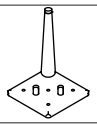	Metal Leg	4
12		Adjustable Leg	1
13		Allen Key M4	1

ITEM	PHOTO	PARTS NAME	QTY
A	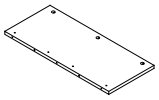	Side Panel Left/Right	2
B	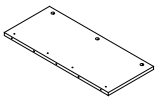	Center Panel	1
C	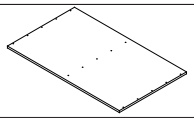	Top Panel	1
D	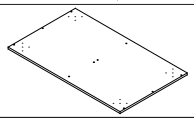	Bottom Panel	1
E	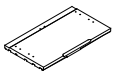	Drawer Front Left Panel	2
F	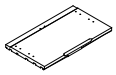	Drawer Front Right Panel	2
G	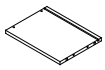	Drawer Side Left Panel	4
H		Drawer Side Right Panel	4
I	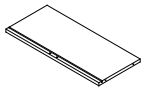	Drawer Back Panel	4
J		Drawer Support Panel	4
K		Center Leg Panel	1
Z	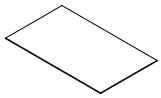	Drawer Bottom Panel	4

CODING
-133137

ISO 9001:2015
Reg. No. 000435-1-MY-1-QMS

nuhoom.com

1

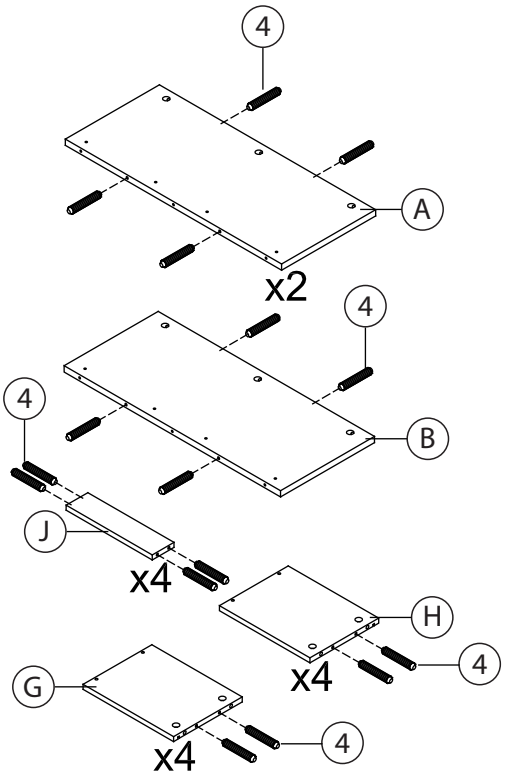

2

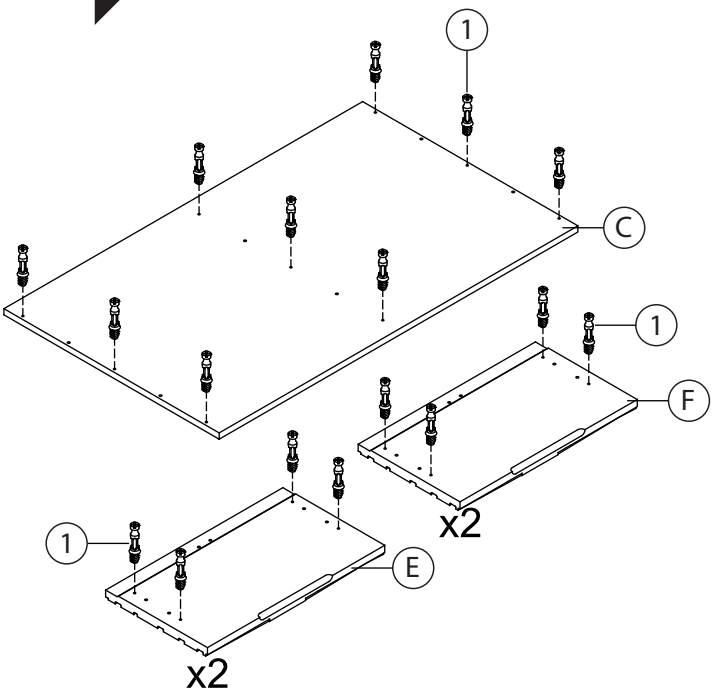

3

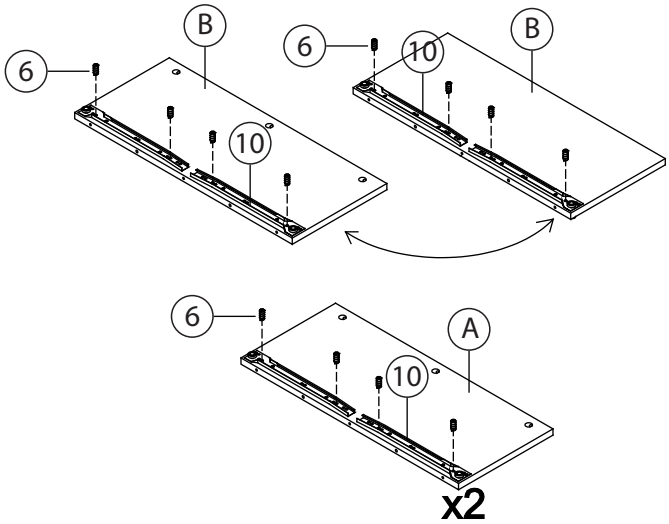

4

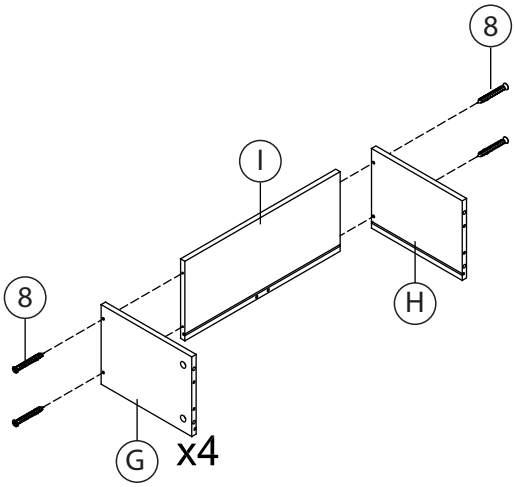

CODING
-133137

ISO 9001:2015
Reg. No. 000435-1-MY-1-QMS

nuhoom.com

5

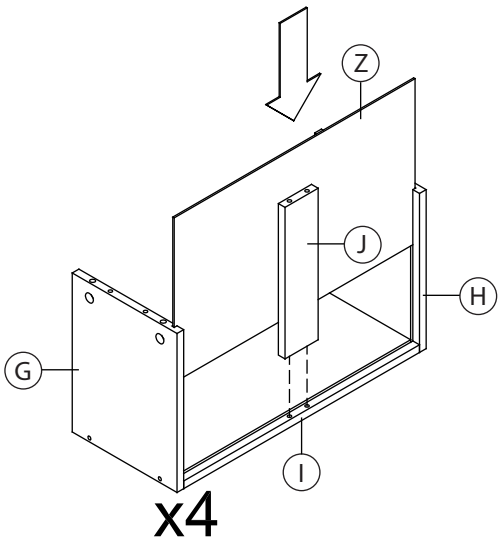

6

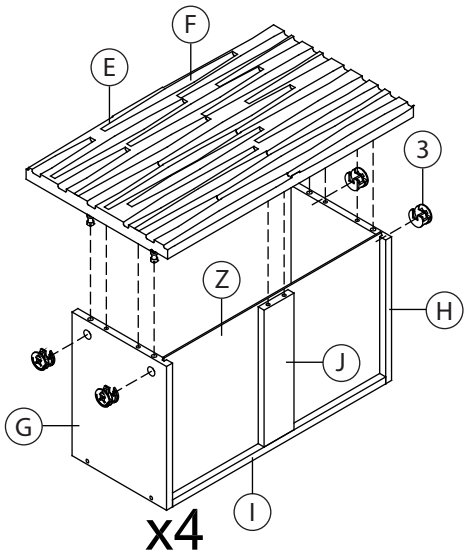

7

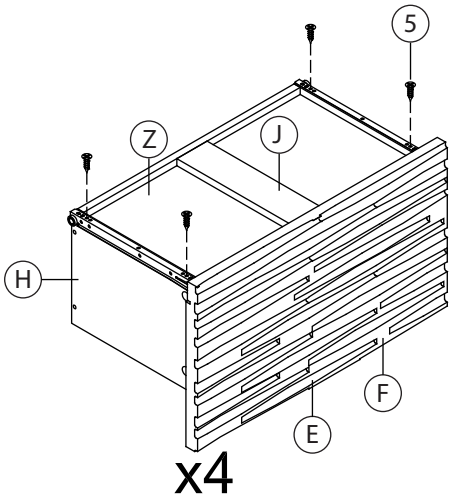

8

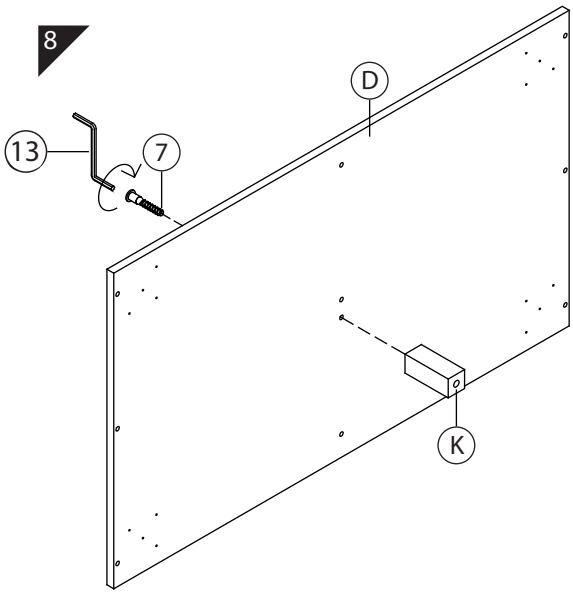

CODING
-133137

ISO 9001:2015
Reg. No. 000435-1-MY-1-QMS

nuhoom.com

9

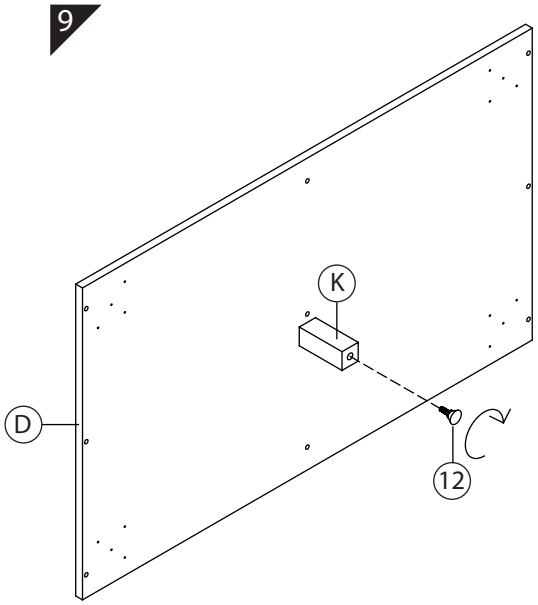

10

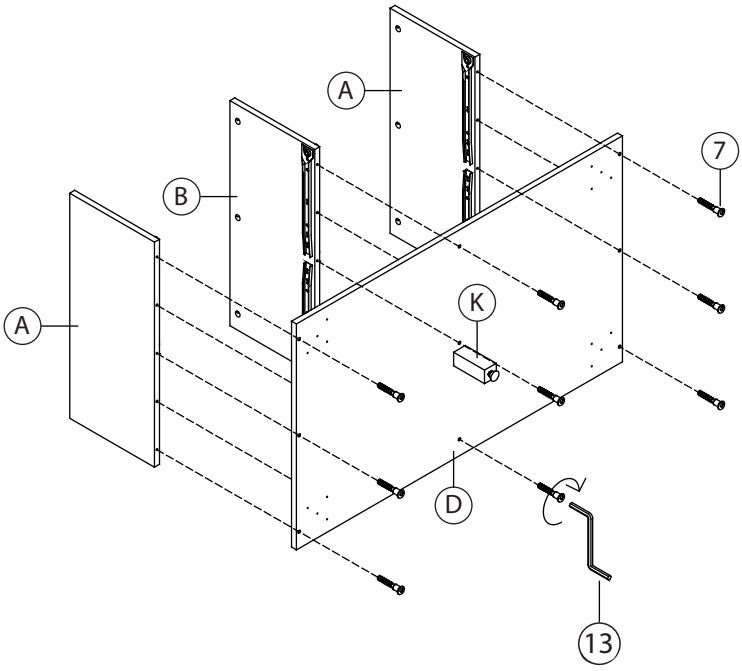

11

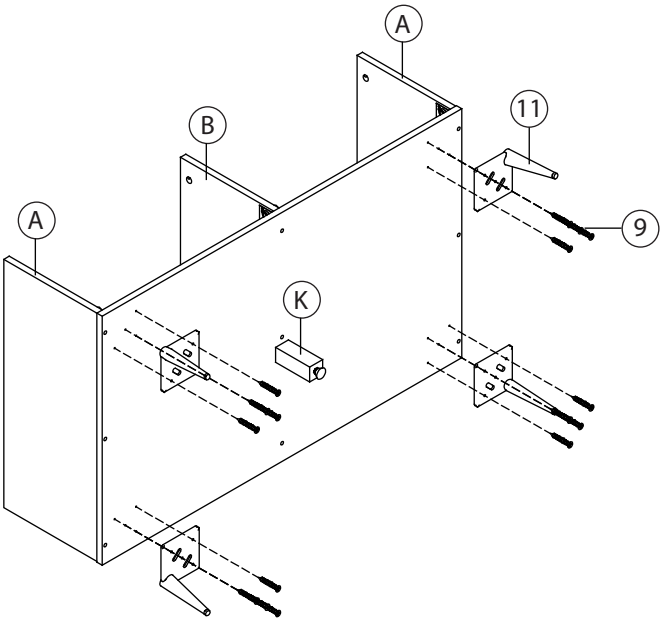

12

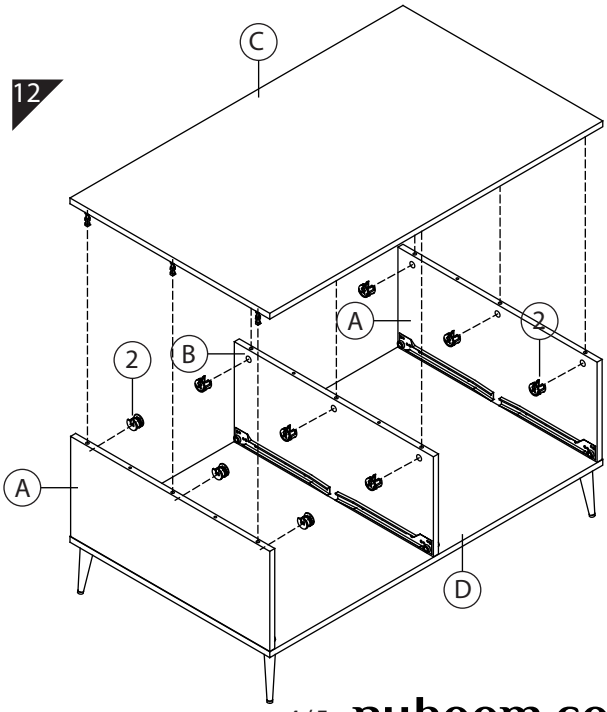

CODING
-133137

ISO 9001:2015
Reg. No. 000435-1-MY-1-QMS

nuhoom.com

13

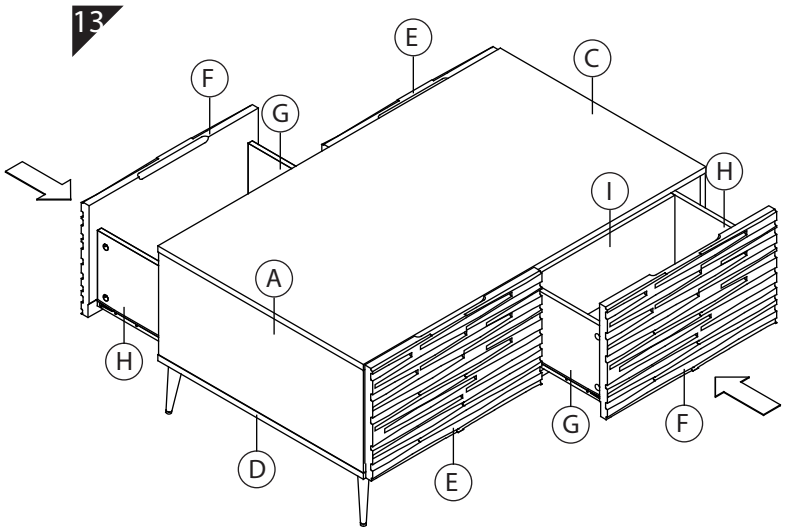
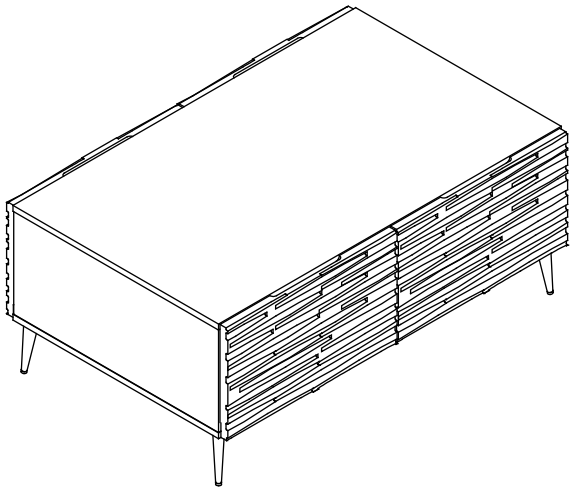
14